QUESTION 1: CALCULATED NUMERIC

10 out of 10 points

If the Laplace transform of the signal $\mathrm{rect}\left(\frac{t}{5}-\frac{1}{2}\right)$ can be written as $\frac{1-e^{-ks}}{s}$, what is the value of the constant k?

Given Answer: 5

Correct Answer: 5

Answer range +/- 0 (5 - 5)

QUESTION 2: MULTIPLE CHOICE

10 out of 10 points

Consider the signal $x(t)=3\,\mathrm{tri}\left(\frac{t-2}{2}\right)$. The Laplace transform of $\frac{d^2x(t)}{dt^2}$ can be written as $f(s)-g(s)e^{-2s}+h(s)e^{-4s}$ where f(s), g(s) and h(s) are polynomial functions of 1/s.

Which one of the below options corresponds to h(s)?

Given Answer: 1.5

Correct Answer: 1.5

QUESTION 3: TRUE/FALSE

5 out of 5 points

A system whose impulse response is given by $h(t)=\left[e^{-t}+t^2e^{-4t}\right]u(t)$ is stable.

Given Answer: True

Correct Answer: True

QUESTION 4: MULTIPLE CHOICE

10 out of 10 points

The inverse Laplace transform of the function $X(s) = \dfrac{s}{s^2 + 6s + 13}$ can be written as $x(t) = [\cos(\omega_0 t) - k\sin(\omega_0 t)]e^{-\alpha t}u(t)$. Which row of the below table contains the correct values of the constants k, ω_0 and α?

Row #	k	ω_0	α
Row 1	2/3	3	2
Row 2	3/2	3	2
Row 3	1/2	4	2
Row 4	2	4	2
Row 5	3/2	2	3
Row 6	2/3	2	3
Row 7	1	3	3
Row 8	2	3	3
Row 9	2	2	4
Row 10	1/2	2	4
Row 11	4/3	3	4
Row 12	3/4	3	4

Given Answer: Row 5

Correct Answer: Row 5

QUESTION 5: MULTIPLE CHOICE

10 out of 10 points

The inverse Laplace transform of the function $X(s) = \dfrac{s+3}{(s+1)(s+2)^2}$ can be written as $x(t) = \left[ae^{-t} + be^{-2t} + cte^{-2t}\right]u(t)$. Which row of the below table contains the correct values of the constants a, b and c?

Row #	a	b	c
Row 1	1	-1	-1
Row 2	-1	1	-1
Row 3	2	-2	-1
Row 4	-2	2	-1
Row 5	1	-1	2
Row 6	-1	1	2
Row 7	2	-2	2
Row 8	-2	2	2
Row 9	2	-2	4
Row 10	-2	2	4
Row 11	3	-3	4
Row 12	-3	3	4

Given Answer: Row 3

Correct Answer: Row 3

QUESTION 6: MULTIPLE CHOICE

10 out of 10 points

Consider the following differential equation:

$$3\frac{dx(t)}{dt} + 2x(t) = 4u(t)$$

subject to the initial condition $x(0^-)=5$.

If the solution of the above differential equation can be written as $x(t)=[a+be^{-ct}]u(t)$, which row of the below table contains the correct values of the constant a, b and c?

Row #	a	b	c
Row 1	2	3	2/3
Row 2	2	-3	2/3
Row 3	4	1	2/3
Row 4	4	-1	2/3
Row 5	2	4	2/3
Row 6	2	-4	2/3
Row 7	2	3	2
Row 8	2	-3	2
Row 9	4	1	2
Row 10	4	-1	2
Row 11	2	4	2
Row 12	2	-4	2

Given Answer: Row 1

Correct Answer: Row 1

QUESTION 7: CALCULATED NUMERIC

10 out of 10 points

The signal $x(t)=e^{-2t}u(t)$ is applied to the input of a system whose transfer function is given by $H(s)=\dfrac{s+4}{s(s^2+6s+2)}$. Find the final value of the response y(t).

Given Answer: 1

Correct Answer: 1

Answer range +/- 0 (1 - 1)

QUESTION 8: MULTIPLE CHOICE

10 out of 10 points

Consider the system shown below:

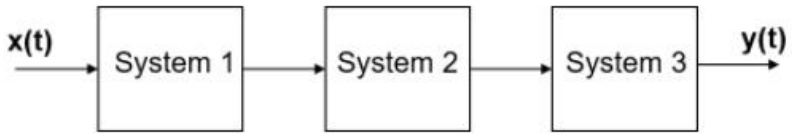

- System 1 is an integrator.
- System 2 has a transfer function of $(s^2+2)/s^2$.
- System 3 has an impulse response of $t \times e^{-3t}u(t)$.

Which row of the below table contains the correct differential equation that relates the output y(t) to the input x(t)? [$x^{(n)}(t)$ stands for the n-th derivative with respect to time]

Row #	Differential Equation
Row 1	$y^{(3)}(t)+3y^{(2)}(t)+9y^{(1)}(t)=x^{(2)}(t)+2x(t)$
Row 2	$y^{(3)}(t)+3y^{(2)}(t)+9y^{(1)}(t)=x^{(1)}(t)+2x(t)$
Row 3	$y^{(4)}(t)+3y^{(3)}(t)+9y^{(2)}(t)=x^{(2)}(t)+2x(t)$
Row 4	$y^{(4)}(t)+3y^{(3)}(t)+9y^{(2)}(t)=x^{(1)}(t)+2x(t)$
Row 5	$y^{(3)}(t)+3y^{(2)}(t)+6y^{(1)}(t)=x^{(2)}(t)+4x(t)$
Row 6	$y^{(3)}(t)+3y^{(2)}(t)+6y^{(1)}(t)=x^{(1)}(t)+4x(t)$
Row 7	$y^{(4)}(t)+3y^{(3)}(t)+6y^{(2)}(t)=x^{(2)}(t)+4x(t)$
Row 8	$y^{(4)}(t)+3y^{(3)}(t)+6y^{(2)}(t)=x^{(1)}(t)+4x(t)$
Row 9	$y^{(3)}(t)+6y^{(2)}(t)+9y^{(1)}(t)=x^{(2)}(t)+2x(t)$
Row 10	$y^{(3)}(t)+6y^{(2)}(t)+9y^{(1)}(t)=x^{(1)}(t)+2x(t)$
Row 11	$y^{(5)}(t)+6y^{(4)}(t)+9y^{(3)}(t)=x^{(2)}(t)+2x(t)$
Row 12	$y^{(5)}(t)+6y^{(4)}(t)+9y^{(3)}(t)=x^{(1)}(t)+2x(t)$

Given Answer: Row 11

Correct Answer: Row 11

QUESTION 9: MULTIPLE CHOICE

10 out of 10 points

Consider the signal x(t) such that:

$$\int_{0^-}^{t} x(\tau)\,d\tau = \frac{1+2e^{-s}+4e^{-3s}}{s^2}$$

Which one of the below figures corresponds to x(t)?

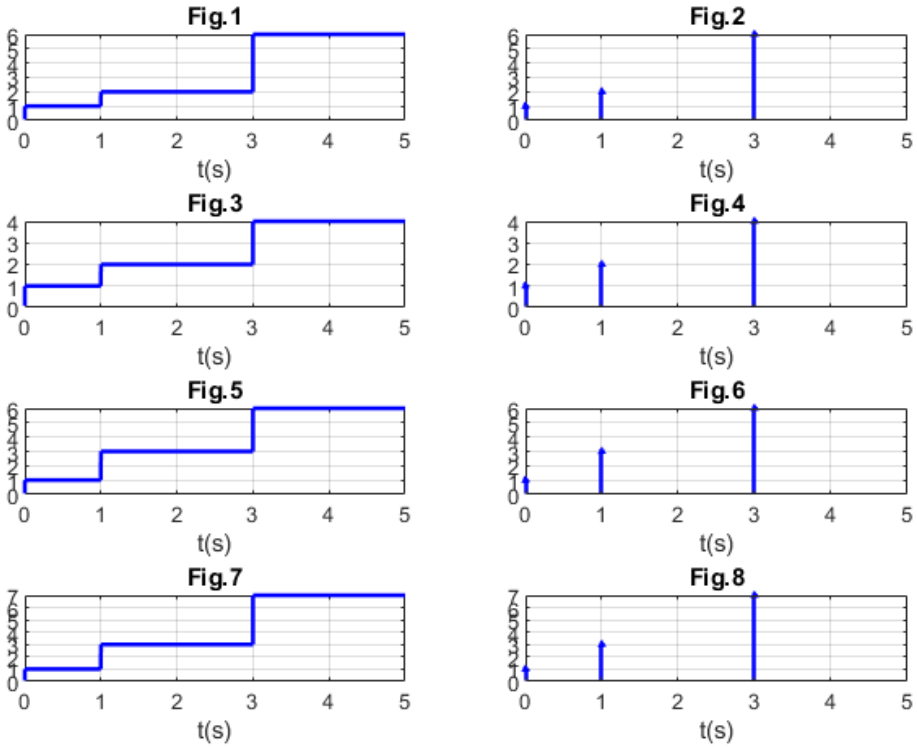

Given Answer: Fig. 7

Correct Answer: Fig. 7

QUESTION 10: MULTIPLE CHOICE

10 out of 10 points

Consider the system shown below where $H_1(s)=1/(s-a)$ and $H_2(s)=3$. Below which value of the real number a is the system stable?

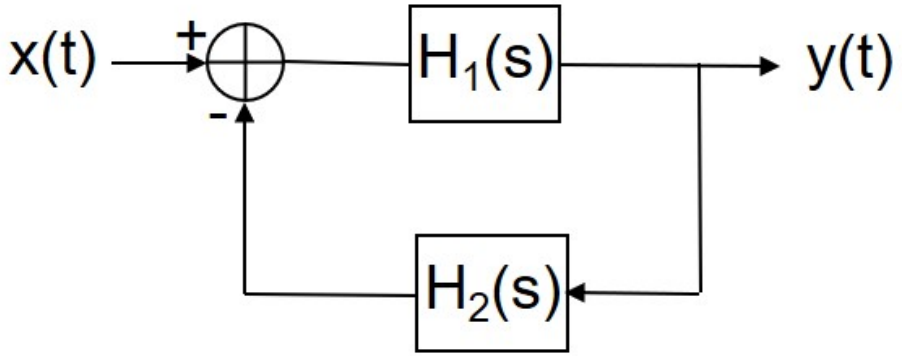

Given Answer: 3

Correct Answer: 3

QUESTION 11: TRUE/FALSE

5 out of 5 points

A system whose transfer function is given by $H(s)=\dfrac{1}{s^2+3}$ is stable.

Given Answer: False

Correct Answer: False